Filex
Workspace Solutions

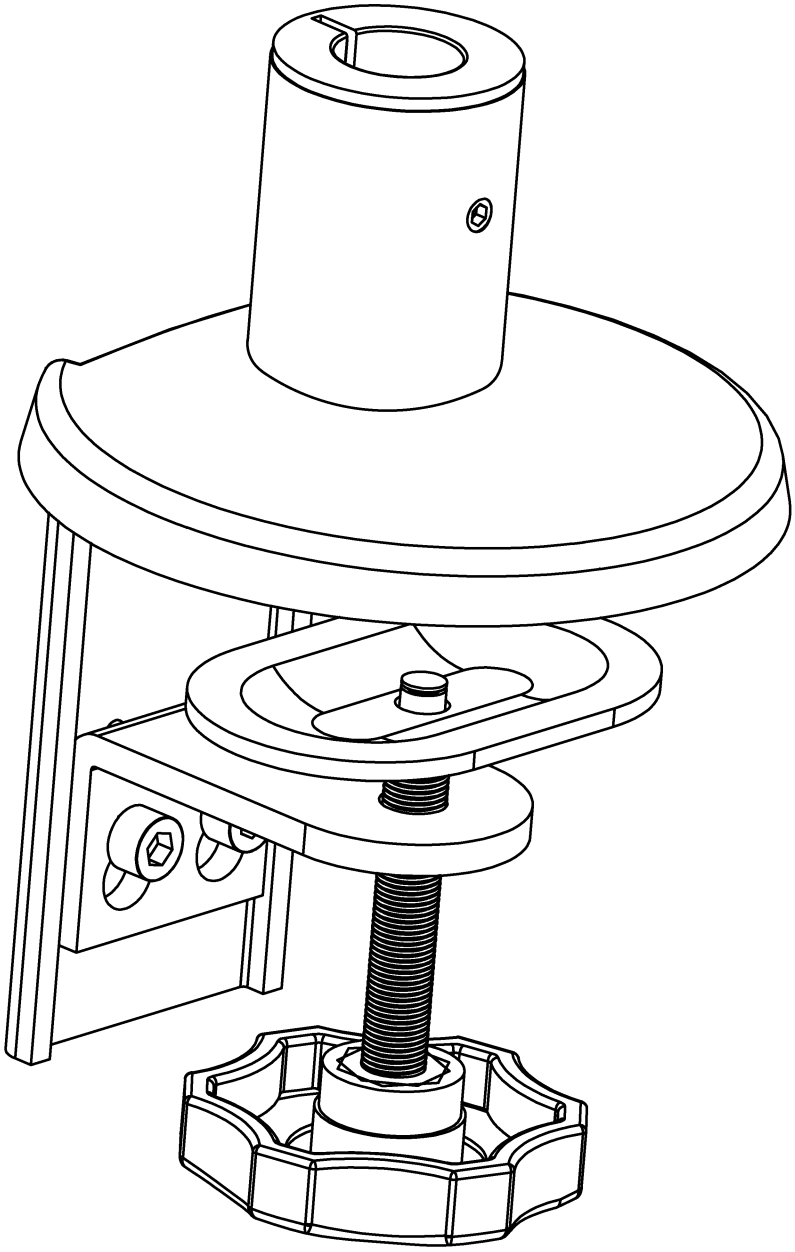
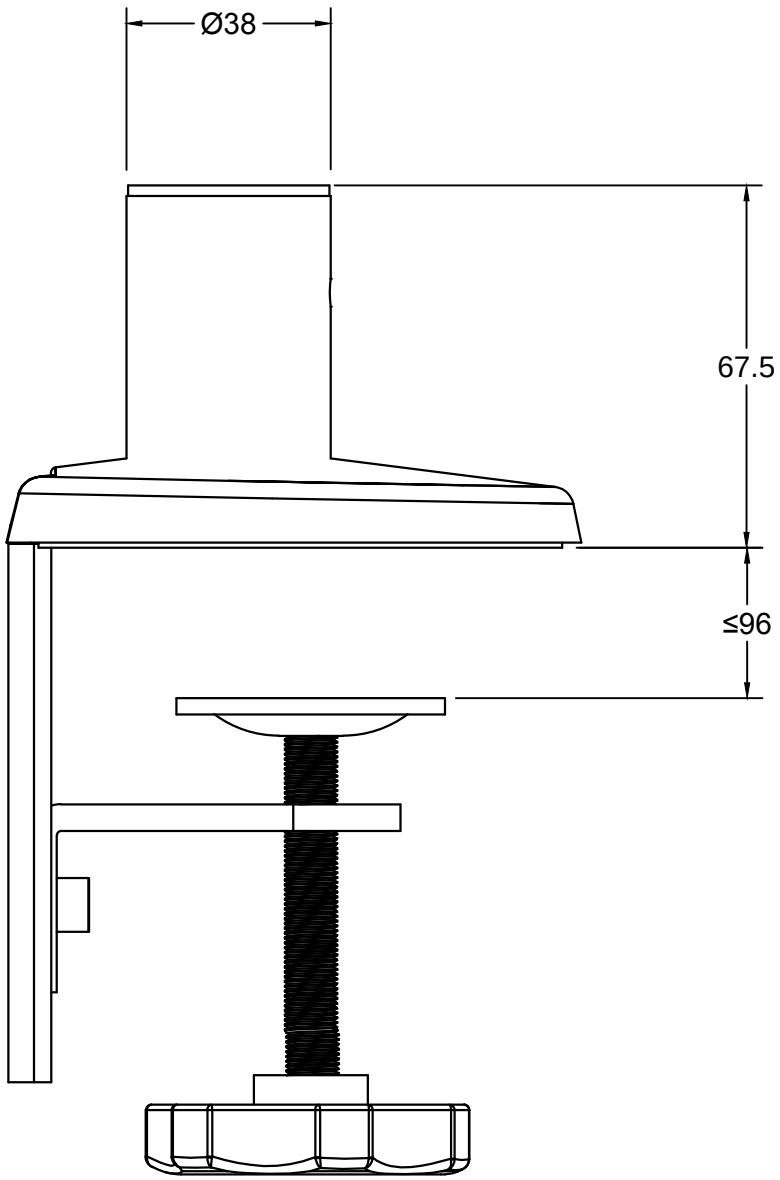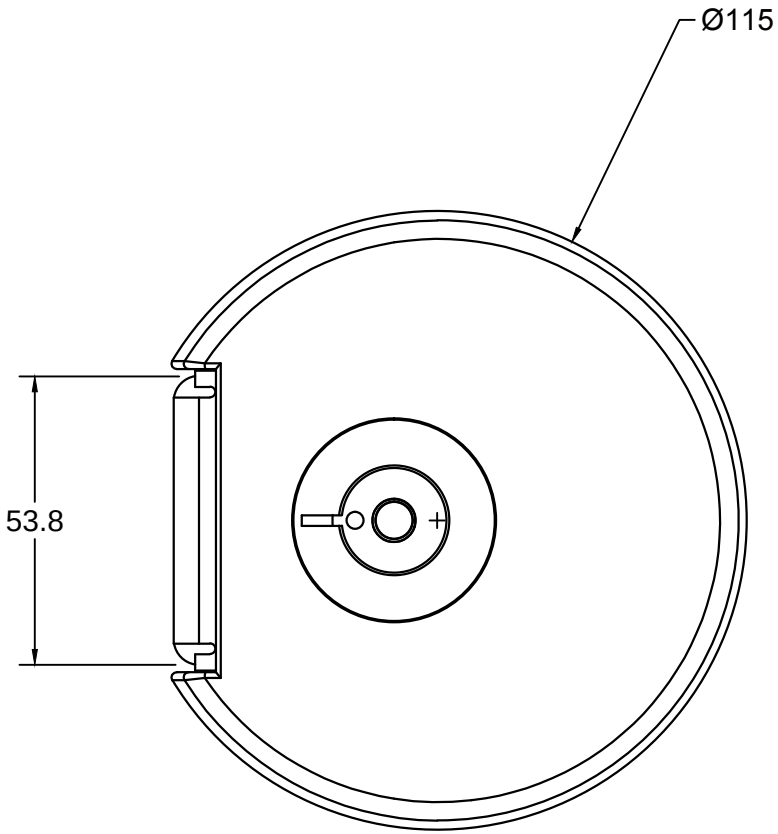
Filex
Workspace Solutions