Filex
Workspace Solutions
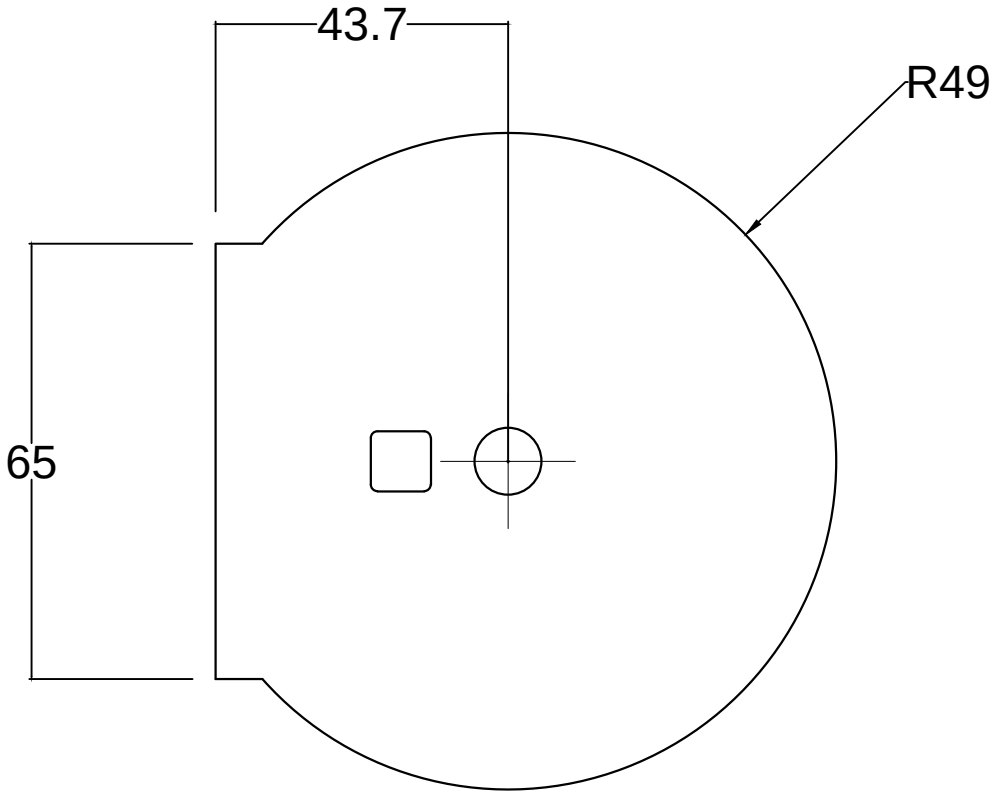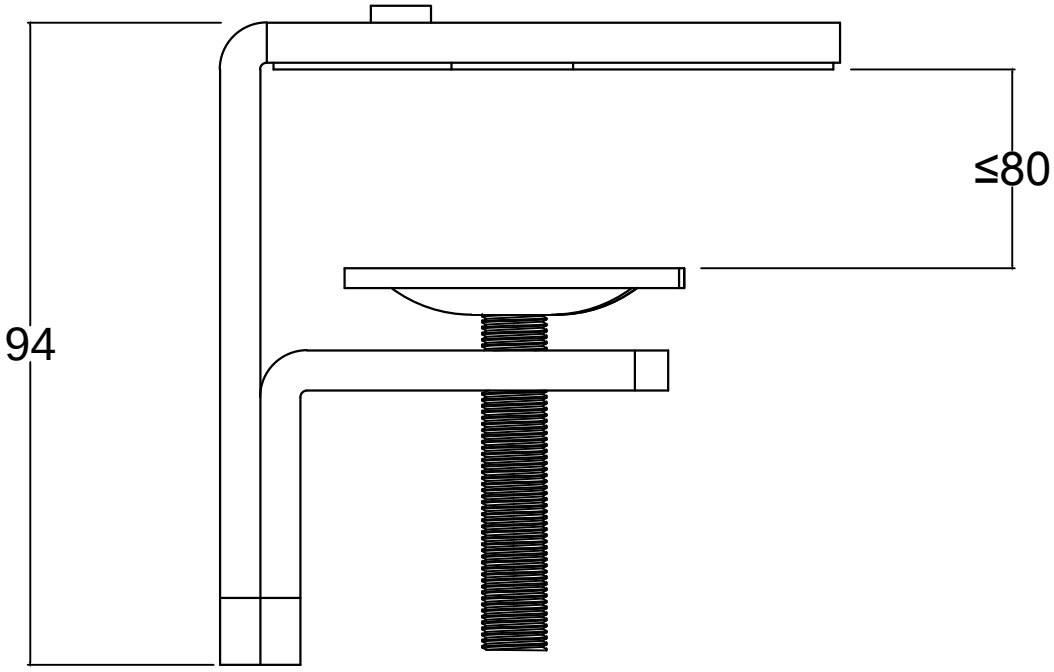
mm